KUS630 Series Ultrasonic Level Sensor

1. Product Features

- High sensitivity
- Fully sealed
- IP68corrosion resistant housing，suitable for corrosive media and applications

2. Overall Size

The unit is mm.

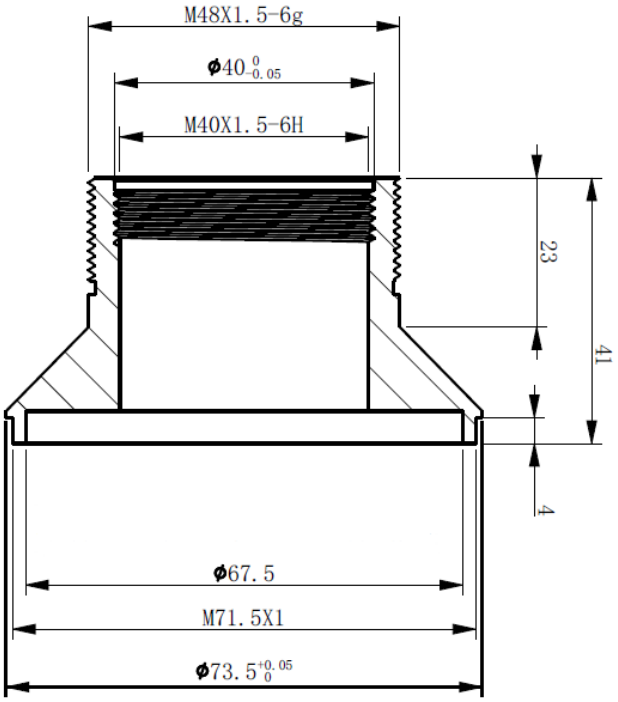

3. Electrical Connection and Signal Definition

Pin	Color	Define
1	red	Power positive
2	black	Power return ground
3	yellow	Analog output，voltage output，current output switching value output
4	blue	RS485 A+ or UART TXD
5	green	RS485 B- or UARTRXD

Tel: 0086-18066719759 Email:support@kacise.com

4. Parameters

Model：KUS630	
Measuring range	600... 15000 mm
Blind area	0 ... 600 mm（less than 600mm is an unstable work area, it is not recommended to work in this range）；there is a 300mm blind zone version that can be customized.
Power supply	3.3 ... 30 V DC , ripple 10 %SS
Working current	≤ 45 mA（maximum measurement speed） Low-power version: the hibernation power is less than]0.3mA, the transmit power is less than 20mA (less than 2ms), and the receive power is less than 5mA(less than 150ms).
Output	1 Programmable analog output 0-10V. 2 RS485 output. 3 UART serial port output 4 .4-20mA output 5.Switch output
Accuracy	≤1 %
Temperature compensation	yes

The working conditions

Operating temperature	-25…70℃(248...343K)
Storage temperature	-40…85℃(233...358K)

Other instructions

Electrical	5-wire cable
Protection grade	IP68
Material Housing	POM

5. Sensor Function

Analog

The analog output can be set through RS485, and the sensor can work in 8 modes. The specific reference is as follows:

Step 1: Connect to the host computer through serial port debugging assistant or modus debugging assistant.

Step 2: is to set a near point reference distance point.

Step 3: set a far point reference point

Step 4: is to set the output voltage or current of the near-point reference point.

Step 5: Set the output voltage or current of the remote reference point.

Step 6:is to set the analog output as the switch characteristic selection.

Step7: is to set the analog output as a linear output or switch output option.

Step 8: reset the sensor to make the new parameters take effect.

8 working modes of the sensor.

1: Open window mode by default

2: The window mode is closed by default

3: Single point mode is turned on by default

4: Single point mode is turned off by default

5: Single-point hysteresis mode is turned on by default

6: Single-point hysteresis mode is turned off by default

7: The presence or absence detection mode is turned on by default

8: The presence or absence detection mode is turned off by default

For the RS485 output type.

There are 2 kinds of working style,

One for auto measure, the sensor will measure the distance or level repeatedly, and the measurement period can be set by the UART. The measure result can be fetched every time.

The other style is power save mode when the sensor is sleep, until the sensor received the inquiry command with pre-code. Communication protocol is Modus-RTU.

For example, the measure result can be read by access the register 0x101 by Modbus protocol.

For more information, please contact us for the software engineering guide.

6.Example of Serial Port Setting Output Form

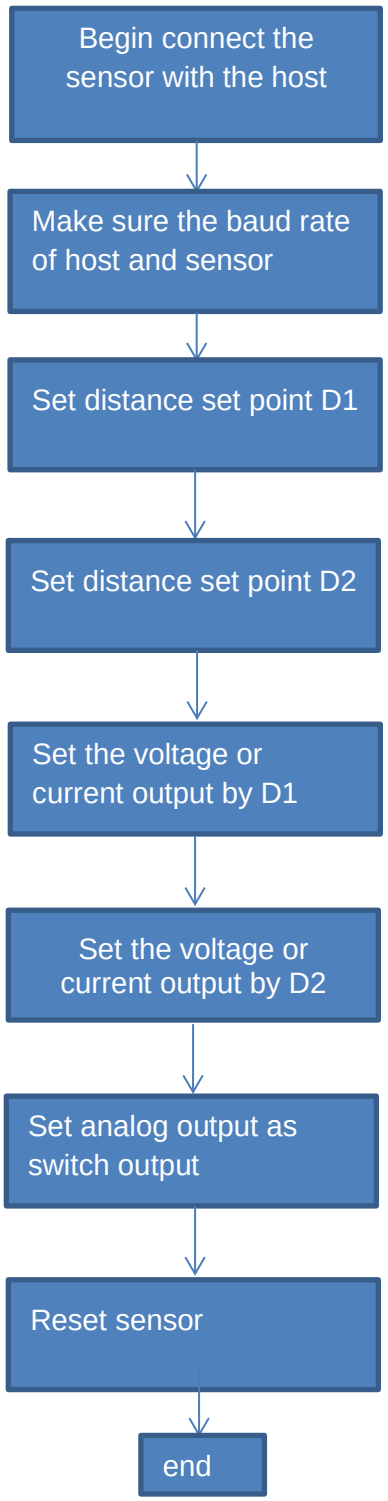

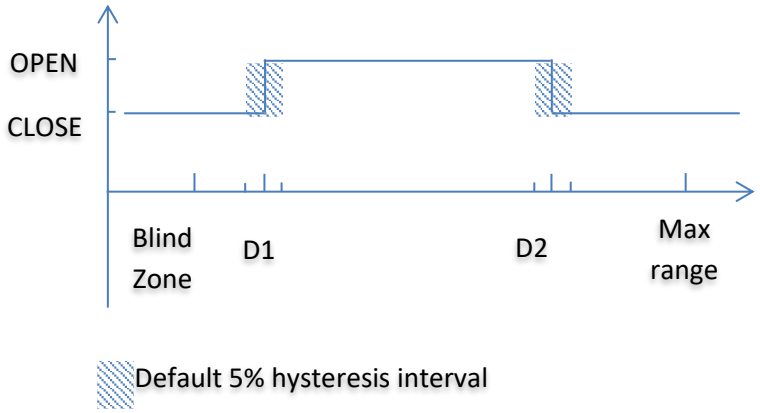

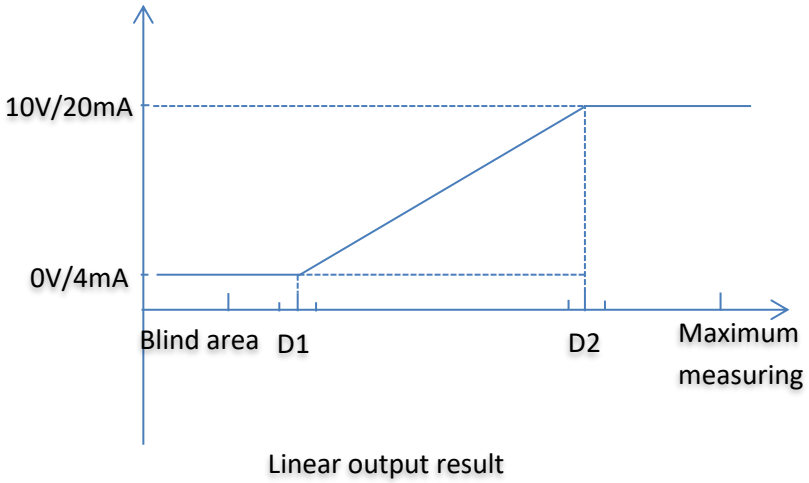

Linear output result

6. Ordering Information

KUS	model	output	Max range	Description
	630	Product Series Model		
	custom made			
		0-10V	Analog 0-10V output	
		0-5V	Analog 0-5V output	
		0-3V	Analog 0-3V output	
		4-20mA	Analog 4-20mA output	
		SW	Switch output	
		URAT	URAT Serial output MODBUS RTU protocol	
		RS485	RS485 output MODBUS RTU protocol	
			XXX mm	XXX mm means the maximum measuring distance
KUS	630	RS485	2000mm	

7. Wechat for Support